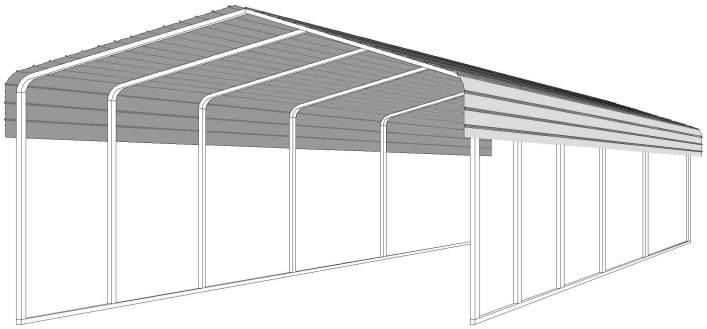

METAL CARPORT INSTALLATION MANUAL

(12' to 30' Wide Models)

CONTENTS

1. SAFETY INFORMATION 2
2. GENERAL DESCRIPTION 3
3. PARTS LIST 4
4. PARTS DESCRIPTION AND QUANTITY 5
5. TOOLS LIST 6
6. BASE INSTALLATION 7
7. FRAME ASSEMBLY 7
8. FRAMES TO BASE ASSEMBLY 9
9. ANCHORING 10
10. MEASUREMENT VERIFICATION 11
11. ROOF PANEL ASSEMBLY 16
12. TRIM ATTACHMENT 18
13. SECURING STRUCTURE 19

1. SAFETY INFORMATION

For your safety and for proper installation, please ready the following instructions carefully. In case you have further questions or are missing parts, please contact our company before starting the installation process.

WARNINGS:

1. INSTALLATION IS NOT RECOMMENDED ON WINDY DAYS AS COMPONENTS WILL BE DIFFICULT TO HANDLE.
2. ALWAYS WEAR SAFETY GLASSES AND GLOVES DURING THE INSTALLATION.
3. AVOID CONTACT WITH SKIN AS METAL PIECES TEND TO GET HOT WHEN EXPOSED TO DIRECT SUN LIGHT.
4. KEEP THE COMPONENTS AWAY FROM ALL ELECTRICAL SOURCES DURING ALL STAGES OF THE INSTALLATION.
5. THE STRUCTURE CAN ONLY MEET THE SPECIFIED DESIGN LOADS ONCE IT HAS BEEN FULL INSTALLED. DO NOT LOAD OR STAND/WALK ON THE STRUCTURE WHILE IT IS BEING ASSEMBLED.
6. STEEL ROOF PANELS HAVE SHARP EDGES. HANDLE THE PANELS CAREFULLY AND AVOID TOUCHING THE EXPOSED EDGES. ALWAYS USE STRONG PROTECTIVE GLOVES.
7. UNTIL THE STRUCTURE IS FULL ANCHORED INTO THE GROUND, THE COMPONENTS MIGHT TEND TO MOVE AND CHANGE ORIENTATION. IF THE STRUCTURE IS BEING MOVED AFTER ASSEMBLY, ENSURE THAT THE DIMENSIONS AND ALIGNMENTS ARE CORRECT.

2. GENERAL DESCRIPTION

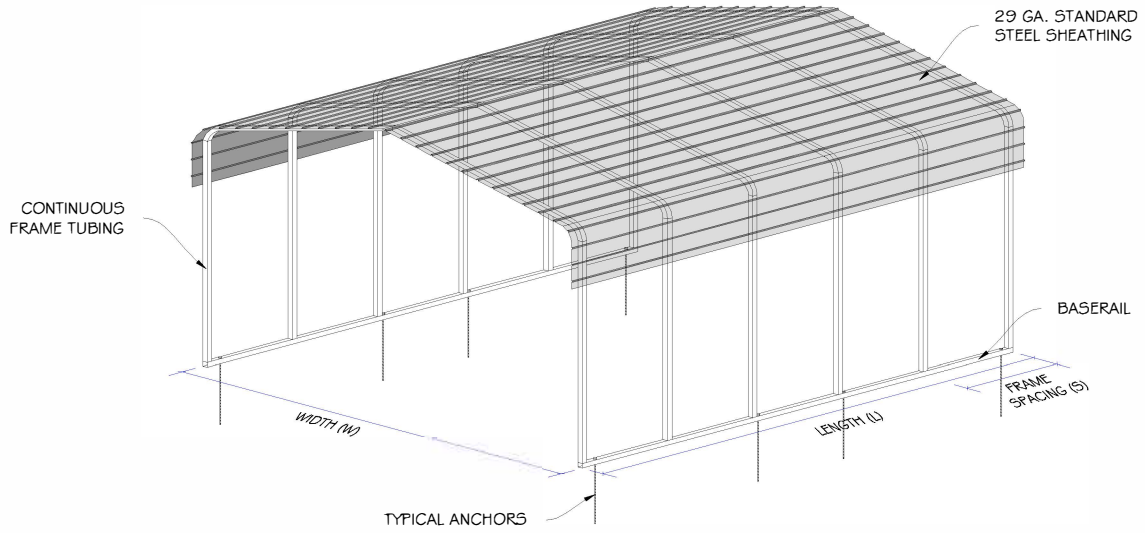

Our carports are designed to ensure quick assembly as well as to provide an aesthetic finish. Follow this step by step guide to complete the simple set-up procedure. In case any parts are missing or arrive damaged, please contact our office.

NOTES:

2.1 These instructions are general in nature an apply to carports of sizes 12' to 30' wide. Some details shown here may vary from your individual carport. Please view the engineering plans for specific details for your carport.

2.2 The carport is designed to meet the local code requirements for dead and live loads. The design criteria can be found on the accompanying plans.

2.3 The anchoring options provided are designed to support the structures against expectied wind uplifts as required by the local building code.

2.4 Tube sizes, gauges as well as frame layout and spacing vary depending on carport width, side enclosement, as well as load requirements. Please refer to the engineering plans for correct specifications.

2.5 The steel rib sheathing has to be a minimum of 29 Ga. thickness.

OPTIONS:

2.6 Building width (W), length (L) and height (H) will be as ordered.

2.7 Frame spacing (S) as well as tube sizes for the arch and column members vary. Please refer to the engineering plans for details.

2.8 For other anchor options, anchor sizes and layout, please refer to the engineering plans.

2.9 Arch may be provided as either unbraced, single-braced or doubled-braced as needed. Please refer to the engineering plans for verification.

2.10 For some cases, columns may need to be doubled by either inserting or attaching adjacently. Again, refer to the engineering plans for correct specifications.

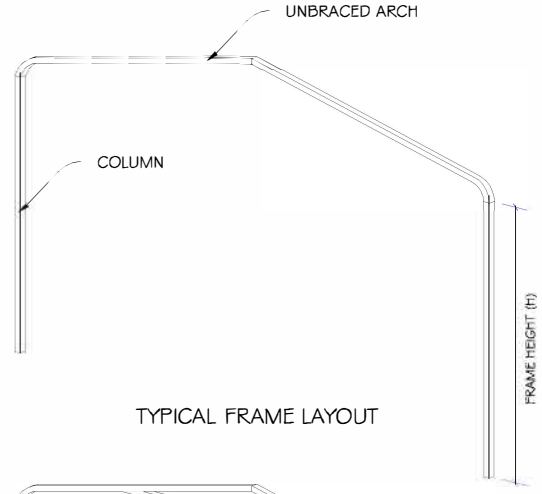

TYPICAL FRAME LAYOUT

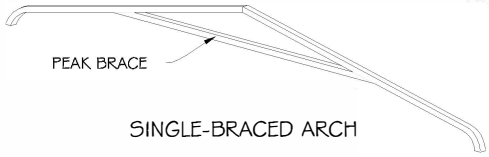

SINGLE-BRACED ARCH

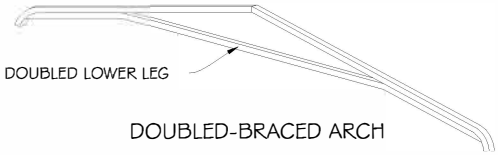

DOUBLED-BRACED ARCH

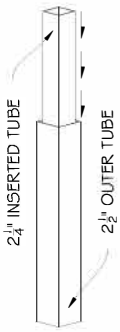

DOUBLED-INSERTED COLUMN

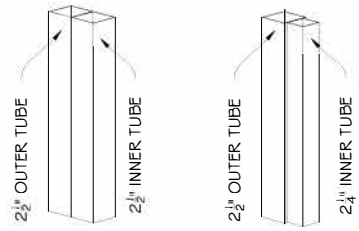

DOUBLED-ADJACENT COLUMNS

3. PARTS - LIST

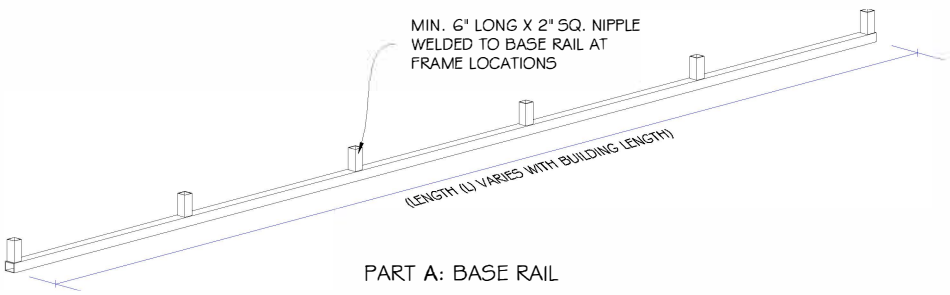

PART A: BASE RAIL

PART B: COLUMN

PART C: $6\frac{3}{8}$" SLEEVES

PART D: ANCHOR OPTIONS

PART E: #12 x 1" SELF TAPPING SCREWS

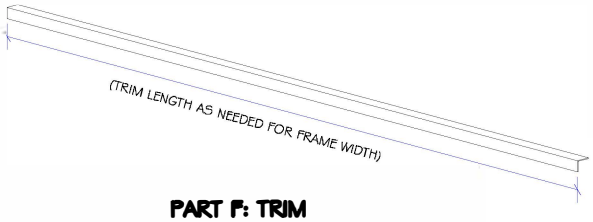

PART F: TRIM

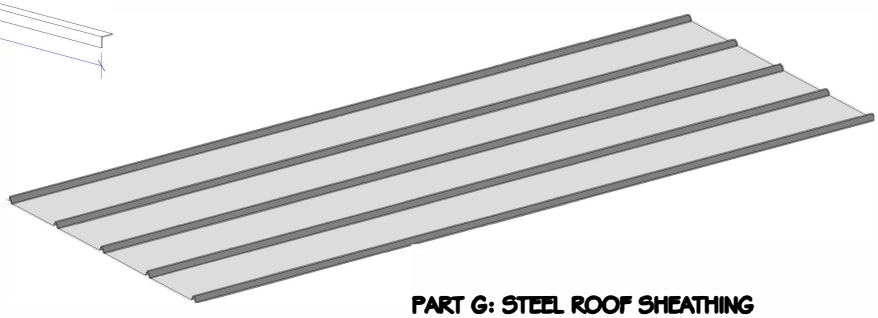

PART G: STEEL ROOF SHEATHING

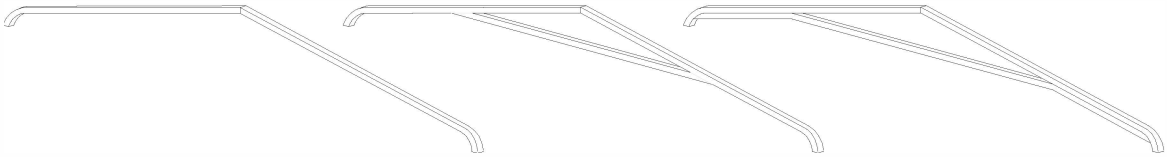

PART H: ARCH (UNBRACED, SINGLE-BRACED OR DOUBLED-BRACED)

4. PARTS - DESCRIPTION AND QUANTITY

PART	DESCRIPTION	LENGTH	QUANTITY
A	BASE RAIL - 12 GA. STRUCTURAL STEEL TUBE. SEE ENGINEERING PLANS FOR TUBE SIZES	AS NEEDED FOR BUILDING LENGTH	2 RUNS - EACH RUN MIGHT BE MADE UP OF MORE THAN ONE PIECE
B	COLUMNS - STRUCTUREAL STEEL TUBE. SEE ENGINEERING PLANS FOR STEEL GAUGE AND TUBE SIZES	MATCHES EAVE HEIGHT OF BUILDING	2 PER FRAME*
C	SLEEVES - STRUCTURAL TUBE STEEL SLEEVES FOR CONNECTING ARCH MEMBERS TO COLUMNS	$6\frac{3}{8}$"	2 PER FRAME*
D	ANCHOR OPTIONS - SEE ENGINEERING PLANS FOR AVAILABLE ANCHOR OPTIONS	VARIES - SEE PLANS	AS SPECIFIED IN ENGINEERING PLANS
E	SCREWS - #12 SELF DRILLING / SELF-TAPPING SCREWS	1"	MIN. 1 BAG
F	TRIM - LIGHT GAUGE STEEL TRIM	AS NEEDED TO COVER EDGES OF SHEATHING	-
G	SHEATHING - MIN 29GA. CORRUGATED STEEL ROOF PANELS 36" WIDE	AS NEEDED FOR BUILDING LENGTH	AS NEEDED FOR COVERED AREA. PLEASE SEE PAGE 9 OF THIS GUIDE
H	ARCHES - STRUCTURAL STEEL TUBE ARCHES. DESIGN VARIES, PLEASE SEE ENGINEERING PLANS	WIDTH AS SPECIFIED. SEE ENGINEERING PLANS	1 PER FRAME*

* PLEASE SEE ENGINEERING PLANS FOR FRAME SPACING AND NUMBER OF FRAMES

5. TOOLS REQUIRED

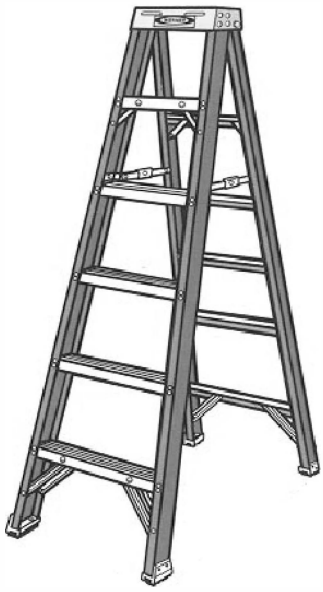

STEP LADDER - (2)

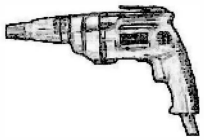

ELECTRIC OR BATTERY
POWERED SCREW GUN - (1)

TAPE MEASURE- (1)

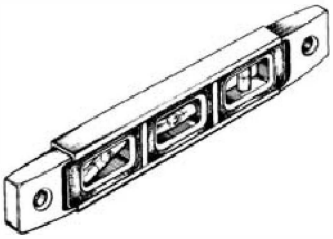

BUBBLE LEVEL- (1)

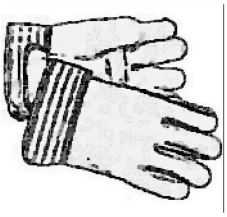

WORK GLOVES- (2 PAIRS)

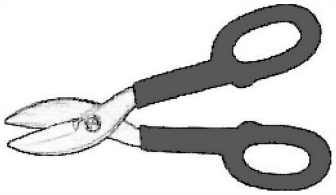

TIN SNIPS- (1 PAIR)

SAFETY GLASSES- (2 PAIRS)

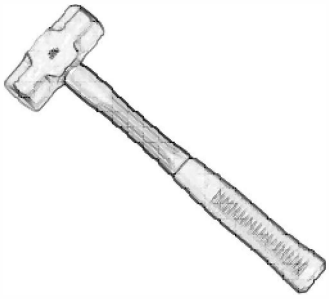

SLEDGE HAMMER- (1)

6. BASE INSTALLATION

6.1 Place base rails (A) on a level surface. Peferably, assemble the carport at the location where it is to be installed.

6.2 Align the base rails (A) parallel to each other at 'W' distance apart. Using the tape measure, ensure both ends of the rails (A) are equidistant at 'W' from each other. Check the engineering plans for the exact dimensions for your carport.

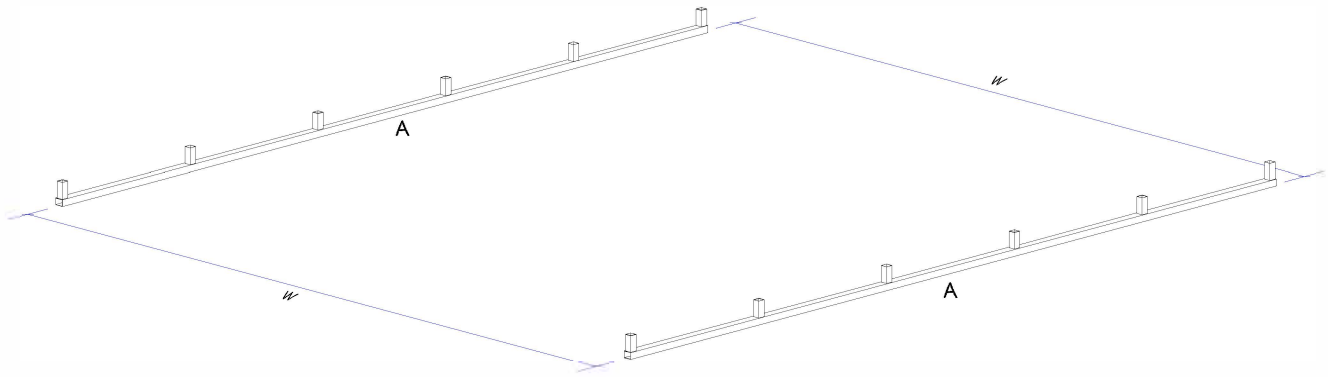

STEPS 6.1 - 6.2

7. FRAME ASSEMBLY

7.1 Insert sleeves (C) half way into the columns (B). Secure the sleeves (C) by self tapping screws (E) on two opposite tube faces.

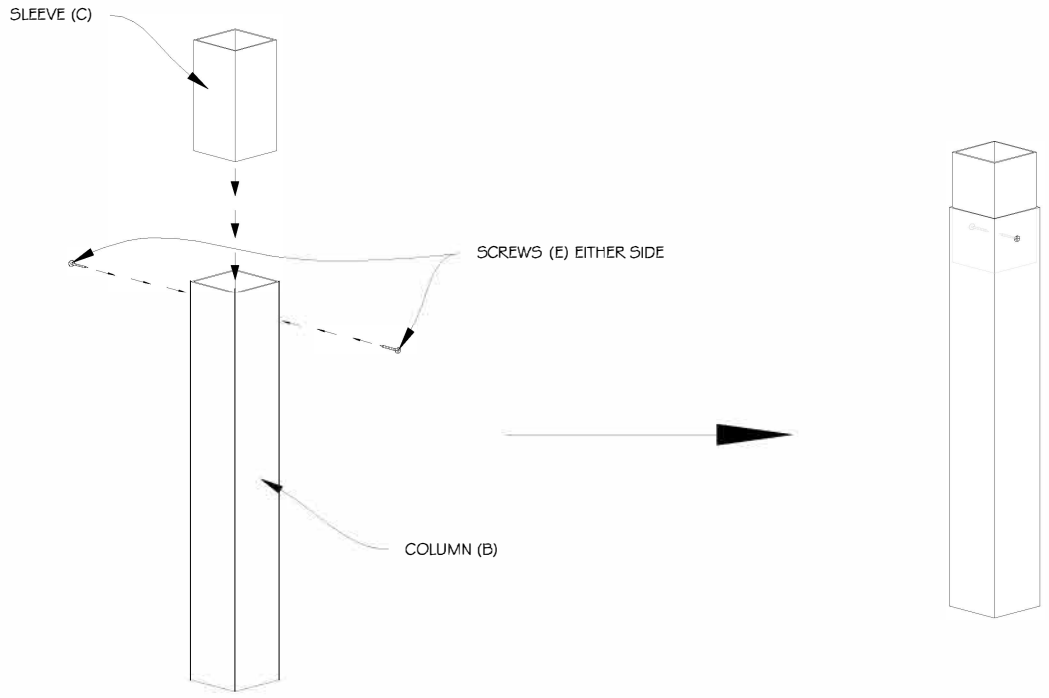

STEP 7.1

NOTE: Sleeves may be pre-attached to the columns

7.2 Insert other end of the sleeve (C) to the arch (H). Attach with two screws (E) similar to step 6.1. The screws (E) have to be on the front and back of the arch (H) as shown.

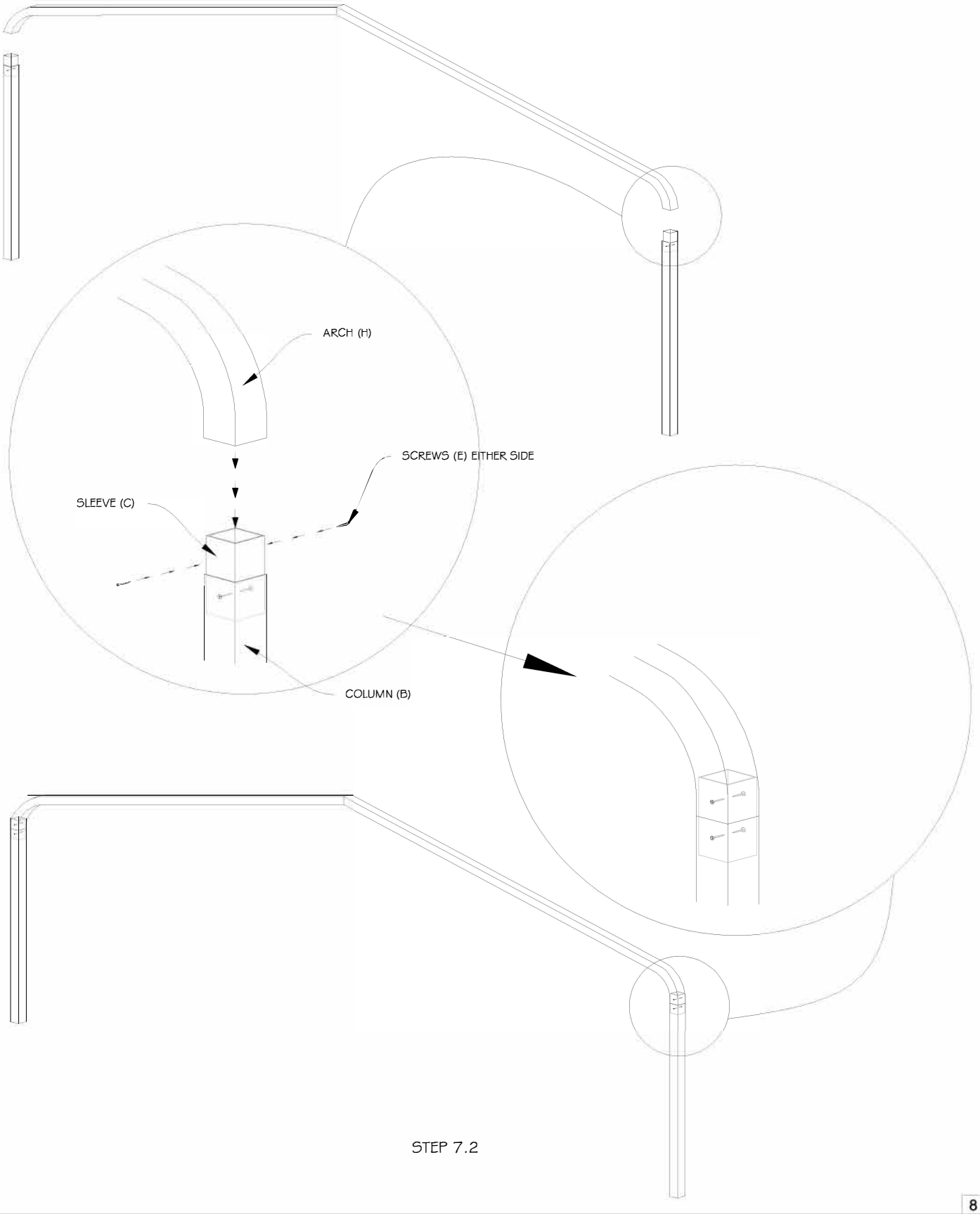

STEP 7.2

8. FRAME TO BASE ASSEMBLY

8.1 Insert assembled frame over sleeve of base rail (A). Column tubes (B) may need to be hammered out slightly to fit over base rail sleeves. DO NOT ATTACH THE ASSEMBLED FRAME TO BASE RAILS WITH SCREWS.

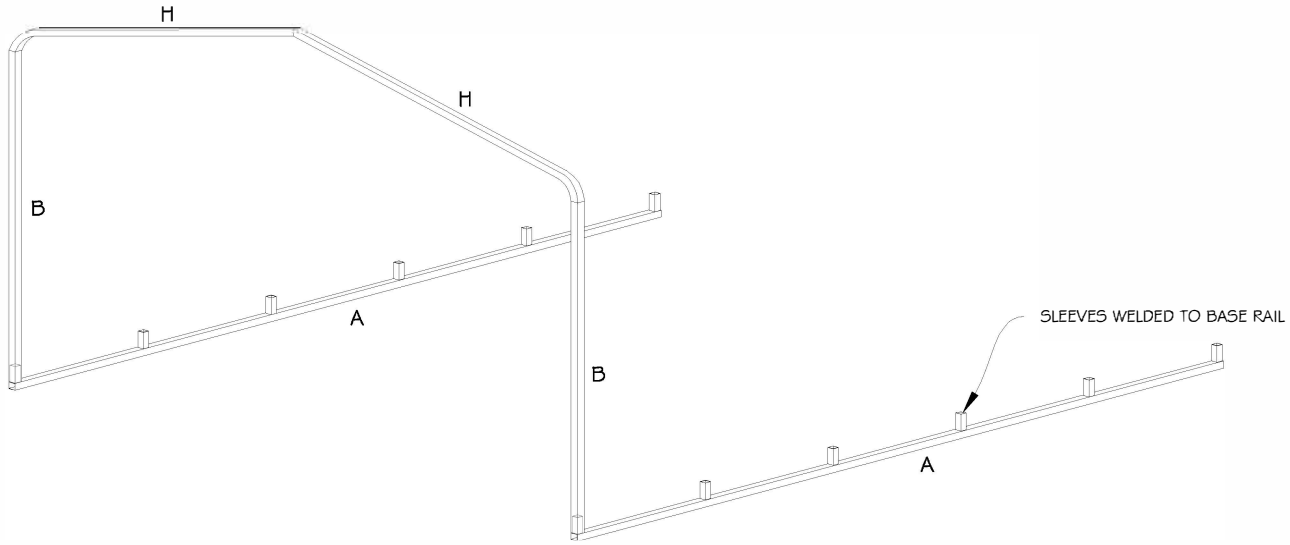

STEP 8.1

8.2 Repeat steps 7 thru 8.1 for all frames. Do not anchor to ground as yet.

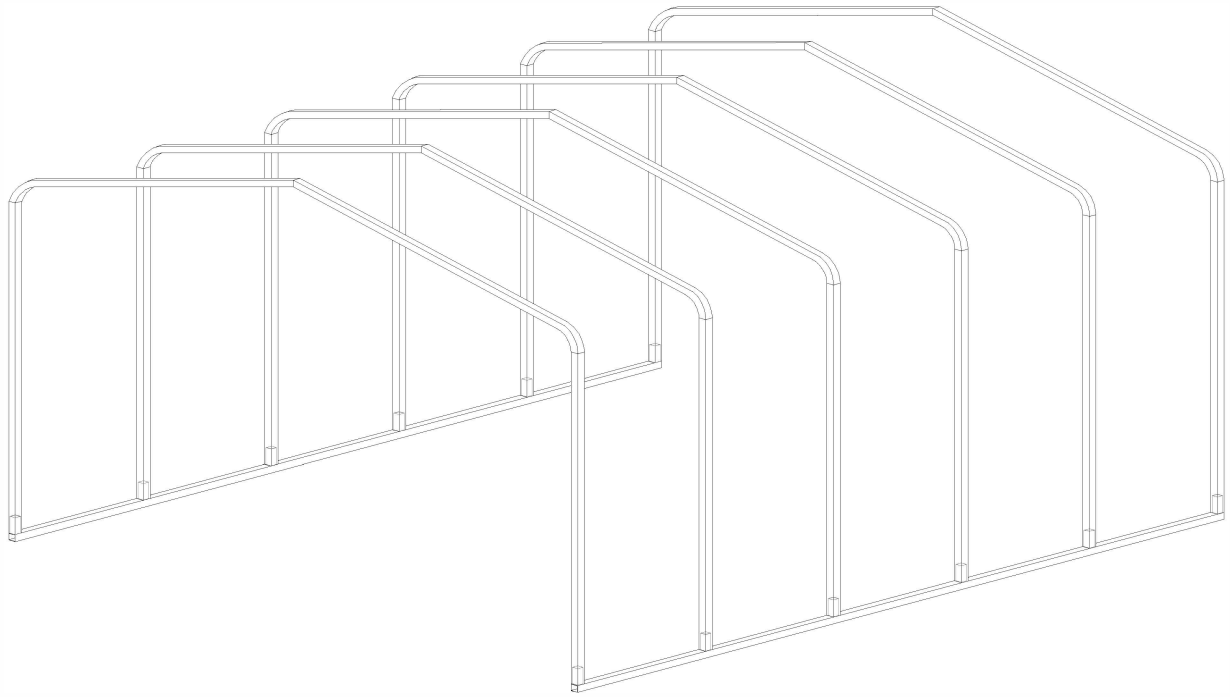

STEP 8.2

9. ANCHORING

9.1 Mark the anchor locations on the base rails (A). If the rails do not have pre-drilled holes for the anchors, drill the holes at the anchor locations. Please see the engineering plans to determine where the anchor locations should be. AT THIS STAGE, ONLY ONE RAIL SHOULD BE ANCHORED TO THE GROUND.

9.2 Use one of the following anchor options (a, b, c or d) to anchor one of the base rails into the ground.

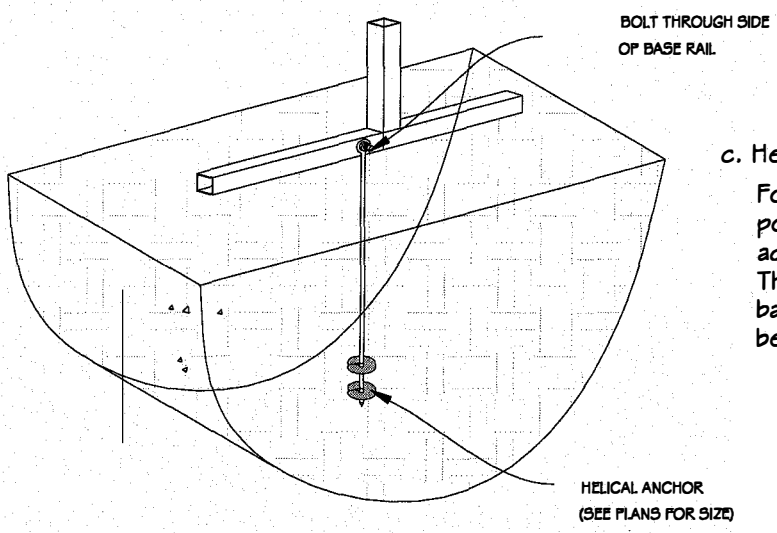

c. Helical Anchor:

For anchoring with helical anchors, position the helical anchor locations adjacent to the base rails as shown. The anchors have to be bolted to the base rails through the sides as shown below.

d. Concrete Foundation with Expansion Bolt:

Follow instructions as specified by expansion bolt manufacturer.

10. MEASURMENT VERIFICATION

For proper instllation, it is essential to verify the measurements. Please follow the steps below to ensure the structure has been properly installed.

10.1 Using a bubble level, ensure all colmuns (B) are vertical.

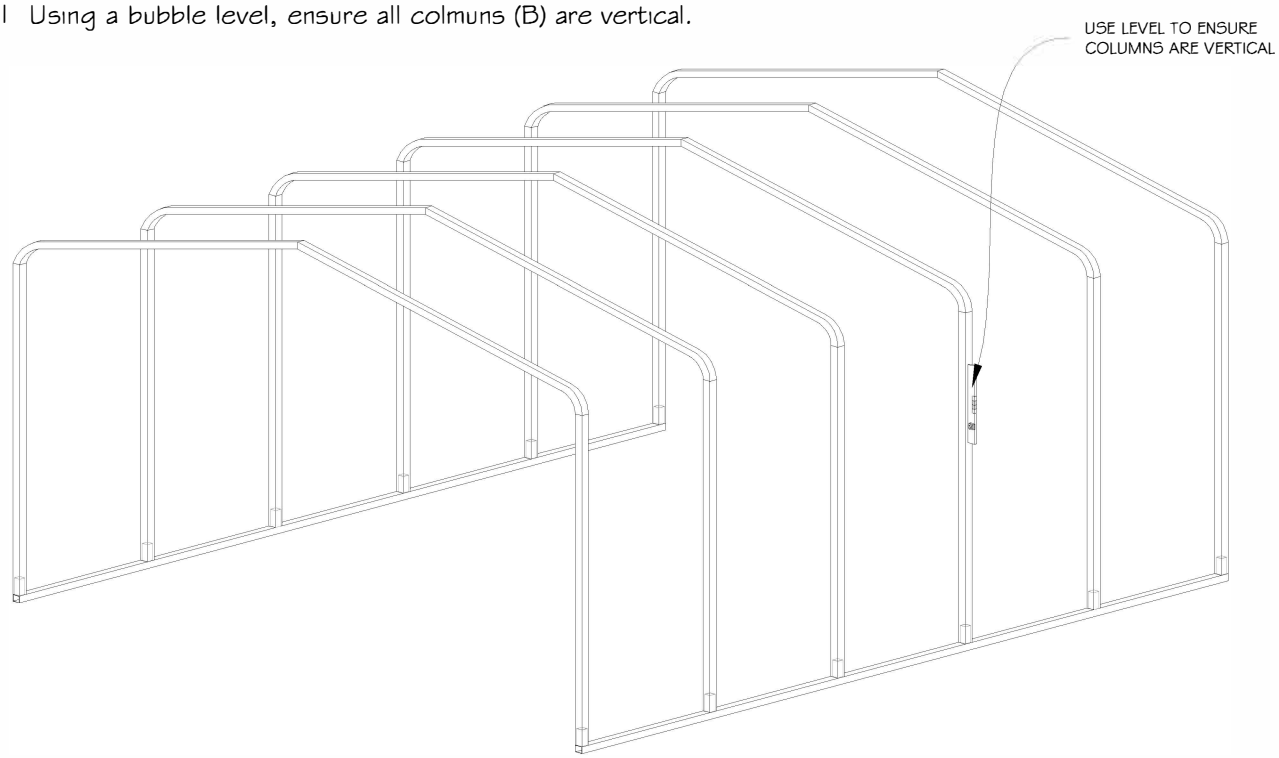

STEP 10.1

10.2 Measure the distance between the two base rails (A) at several locations. These should be equal to the carport width 'W'.

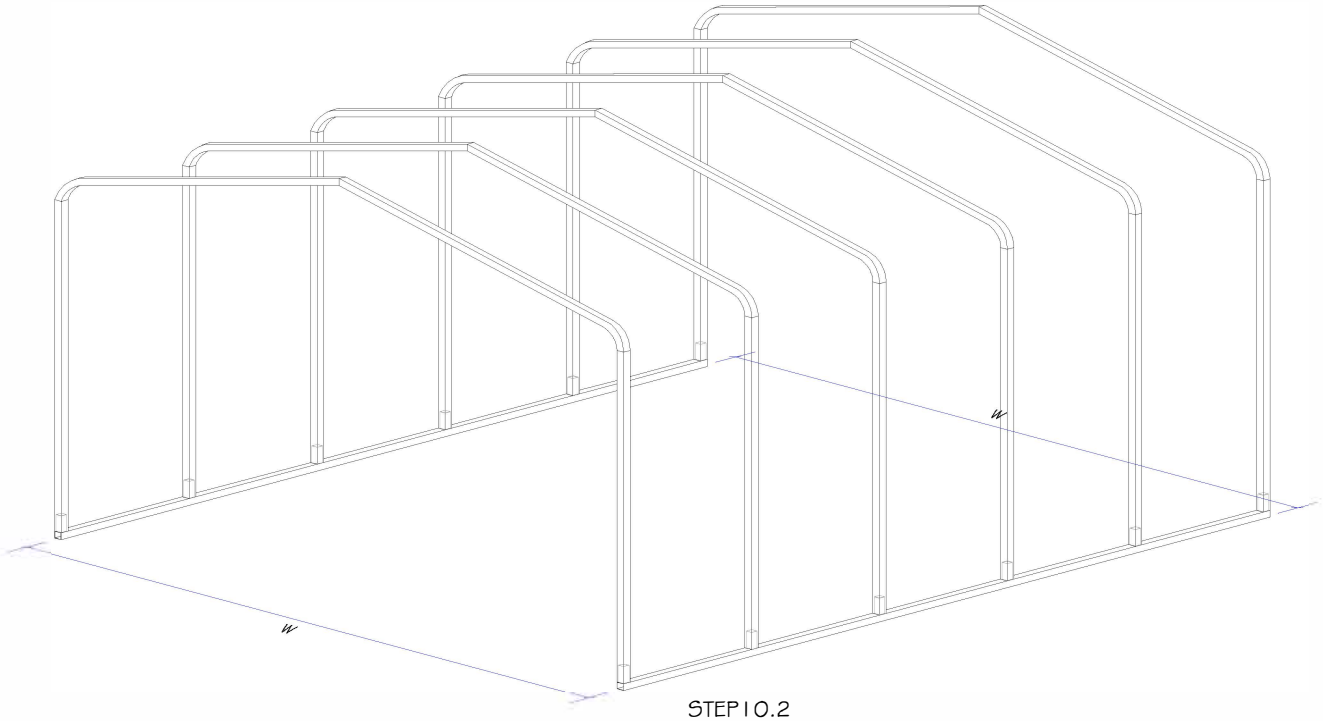

STEP 10.2

10.3 Measure the distance to diagonally opposite corners of the structure. These should be equal to each other and should follow the Pythogeran theorem (square of cross distance should be equal to squares on the length and width). Please see the table provided for different lenghts and widths to determine diagonal cross distance length.

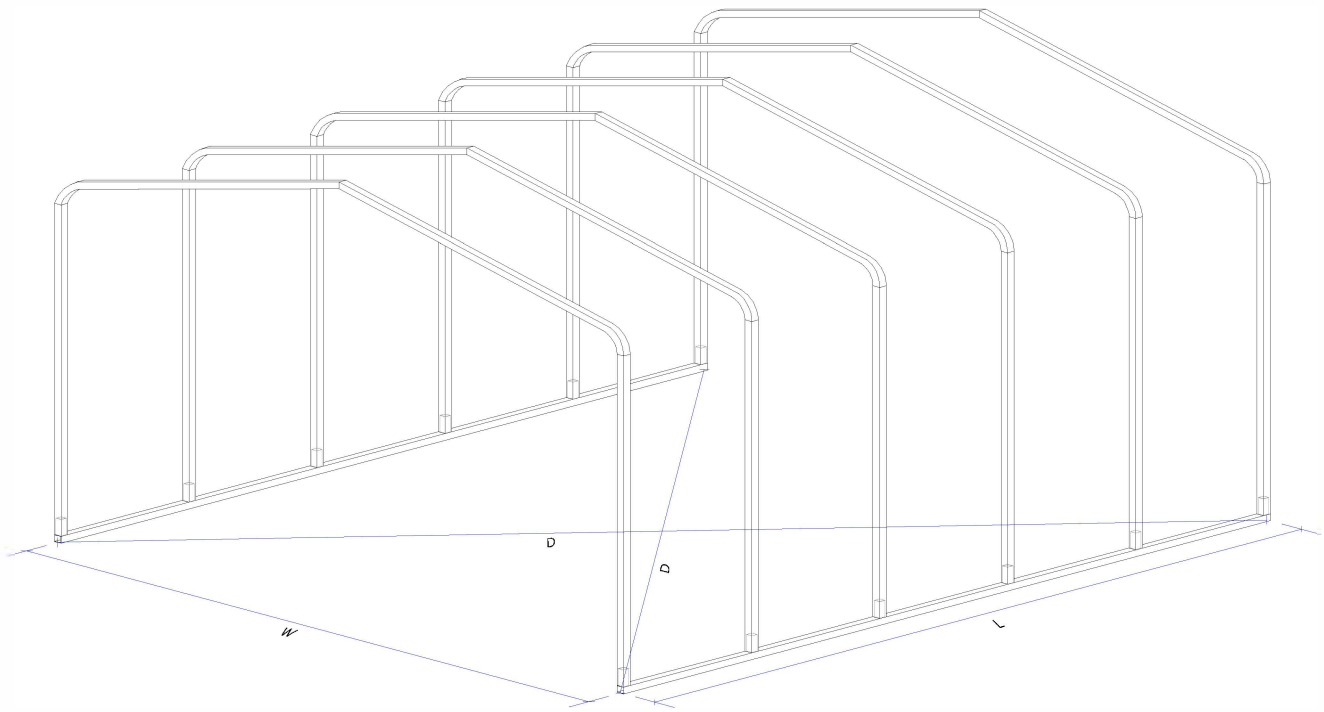

STEP 10.3

CROSS MEASUREMENT VERIFICATION CHART

KEY: ROWS - LENGTH; COLUMNS - WIDTH.

	12'	14'	15'	16'	18'	20'	22'	24'	26'	28'	30'
12'	16' 11.6"	18' 5.3"	19' 2.5"	20' 0"	21' 7.6"	23' 3.9"	25' 0.7"	26' 10"	28' 7.6"	30' 5.6"	32' 3.7"
13'	17' 8.3"	19' 1.3"	19' 10.2"	20' 7.4"	22' 2.4"	23' 10.2"	25' 6.6"	27' 3.5"	29' 0.8"	30' 10.4"	32' 8.3"
14'	18' 5.3"	19' 9.6"	20' 6.2"	21' 3.1"	22' 9.6"	24' 5"	26' 0.9"	27' 9.4"	29' 6.4"	31' 3.7"	33' 1.3"
15'	19' 2.5"	20' 6.2"	21' 2.6"	21' 11.2"	23' 5.2"	25' 0"	26' 7.5"	28' 3.6"	30' 0.2"	31' 9.2"	33' 6.5"
16'	20' 0"	21' 3.1"	21' 11.2"	22' 7.5"	24' 1"	25' 7.3"	27' 2.4"	28' 10.1"	30' 6.3"	32' 3"	34' 0"
17'	20' 9.7"	22' 0.3"	22' 8.1"	23' 4.1"	24' 9.1"	26' 3"	27' 9.6"	29' 4.9"	31' 0.8"	32' 9.1"	34' 5.8"
18'	21' 7.6"	22' 9.6"	23' 5.2"	24' 1"	25' 5.5"	26' 10.9"	28' 5.1"	30' 0"	31' 7.5"	33' 3.4"	34' 11.8"
19'	22' 5.7"	23' 7.2"	24' 2.5"	24' 10.1"	26' 2.1"	27' 7"	29' 0.8"	30' 7.3"	32' 2.4"	33' 10.1"	35' 6.1"
20'	23' 3.9"	24' 5"	25' 0"	25' 7.3"	26' 10.9"	28' 3.4"	29' 8.8"	31' 2.9"	32' 9.6"	34' 4.9"	36' 0.7"
21'	24' 2.2"	25' 2.9"	25' 9.7"	26' 4.8"	27' 7.9"	29' 0"	30' 5"	31' 10.7"	33' 5.1"	35' 0"	36' 7.4"
22'	25' 0.7"	26' 0.9"	26' 7.5"	27' 2.4"	28' 5.1"	29' 8.8"	31' 1.4"	32' 6.7"	34' 0.7"	35' 7.3"	37' 2.4"
23'	25' 11.3"	26' 11.1"	27' 5.5"	28' 0.2"	29' 2.5"	30' 5.8"	31' 9.9"	33' 2.9"	34' 8.6"	36' 2.8"	37' 9.6"
24'	26' 10"	27' 9.4"	28' 3.6"	28' 10.1"	30' 0"	31' 2.9"	32' 6.7"	33' 11.3"	35' 4.6"	36' 10.5"	38' 5"
25'	27' 8.8"	28' 7.8"	29' 1.9"	29' 8.2"	30' 9.7"	32' 0.2"	33' 3.6"	34' 7.9"	36' 0.8"	37' 6.4"	39' 0.6"
26'	28' 7.6"	29' 6.4"	30' 0.2"	30' 6.3"	31' 7.5"	32' 9.6"	34' 0.7"	35' 4.6"	36' 9.2"	38' 2.5"	39' 8.4"
27'	29' 6.6"	30' 5"	30' 10.6"	31' 4.6"	32' 5.4"	33' 7.2"	34' 9.9"	36' 1.5"	37' 5.8"	38' 10.8"	40' 4.3"
28'	30' 5.6"	31' 3.7"	31' 9.2"	32' 3"	33' 3.4"	34' 4.9"	35' 7.3"	36' 10.5"	38' 2.5"	39' 7.2"	41' 0.4"
29'	31' 4.6"	32' 2.4"	32' 7.8"	33' 1.5"	34' 1.6"	35' 2.7"	36' 4.8"	37' 7.7"	38' 11.4"	40' 3.7"	41' 8.7"
30'	32' 3.7"	33' 1.3"	33' 6.5"	34' 0"	34' 11.8"	36' 0.7"	37' 2.4"	38' 5"	39' 8.4"	41' 0.4"	42' 5.1"
31'	33' 2.9"	34' 0.2"	34' 5.3"	34' 10.6"	35' 10.2"	36' 10.7"	38' 0.2"	39' 2.5"	40' 5.5"	41' 9.3"	43' 1.7"
32'	34' 2.1"	34' 11.1"	35' 4.1"	35' 9.3"	36' 8.6"	37' 8.8"	38' 10"	40' 0"	41' 2.8"	42' 6.2"	43' 10.4"
33'	35' 1.4"	35' 10.2"	36' 3"	36' 8.1"	37' 7.1"	38' 7.1"	39' 7.9"	40' 9.7"	42' 0.1"	43' 3.3"	44' 7.2"
34'	36' 0.7"	36' 9.2"	37' 1.9"	37' 6.9"	38' 5.6"	39' 5.4"	40' 6"	41' 7.4"	42' 9.6"	44' 0.5"	45' 4.1"
35'	37' 0"	37' 8.4"	38' 0.9"	38' 5.8"	39' 4.3"	40' 3.7"	41' 4.1"	42' 5.3"	43' 7.2"	44' 9.9"	46' 1.2"
36'	37' 11.4"	38' 7.5"	39' 0"	39' 4.7"	40' 3"	41' 2.2"	42' 2.3"	43' 3.2"	44' 4.9"	45' 7.3"	46' 10.3"
37'	38' 10.8"	39' 6.7"	39' 11.1"	40' 3.7"	41' 1.8"	42' 0.7"	43' 0.6"	44' 1.2"	45' 2.7"	46' 4.8"	47' 7.6"
38'	39' 10.2"	40' 6"	40' 10.2"	41' 2.8"	42' 0.6"	42' 11.3"	43' 10.9"	44' 11.3"	46' 0.5"	47' 2.4"	48' 5"
39'	40' 9.7"	41' 5.2"	41' 9.4"	42' 1.9"	42' 11.4"	43' 10"	44' 9.3"	45' 9.5"	46' 10.5"	48' 0.1"	49' 2.4"

CROSS MEASUREMENT VERIFICATION CHART (CONTD.)

	12'	14'	15'	16'	18'	20'	22'	24'	26'	28'	30'
40'	41' 9.1"	42' 4.6"	42' 8.6"	43' 1"	43' 10.4"	44' 8.7"	45' 7.8"	46' 7.8"	47' 8.5"	48' 9.9"	50' 0"
41'	42' 8.6"	43' 3.9"	43' 7.9"	44' 0.1"	44' 9.3"	45' 7.4"	46' 6.4"	47' 6.1"	48' 6.6"	49' 7.8"	50' 9.6"
42'	43' 8.2"	44' 3.3"	44' 7.2"	44' 11.3"	45' 8.3"	46' 6.2"	47' 5"	48' 4.5"	49' 4.8"	50' 5.7"	51' 7.4"
43'	44' 7.7"	45' 2.7"	45' 6.5"	45' 10.6"	46' 7.4"	47' 5.1"	48' 3.6"	49' 2.9"	50' 3"	51' 3.8"	52' 5.2"
44'	45' 7.3"	46' 2.1"	46' 5.8"	46' 9.8"	47' 6.5"	48' 4"	49' 2.3"	50' 1.4"	51' 1.3"	52' 1.8"	53' 3"
45'	46' 6.9"	47' 1.5"	47' 5.2"	47' 9.1"	48' 5.6"	49' 2.9"	50' 1.1"	51' 0"	51' 11.7"	53' 0"	54' 1"
46'	47' 6.5"	48' 1"	48' 4.6"	48' 8.4"	49' 4.8"	50' 1.9"	50' 11.9"	51' 10.6"	52' 10.1"	53' 10.2"	54' 11"
47'	48' 6.1"	49' 0.5"	49' 4"	49' 7.8"	50' 3.9"	51' 0.9"	51' 10.7"	52' 9.3"	53' 8.5"	54' 8.5"	55' 9.1"
48'	49' 5.7"	50' 0"	50' 3.5"	50' 7.2"	51' 3.2"	52' 0"	52' 9.6"	53' 8"	54' 7.1"	55' 6.8"	56' 7.2"
49'	50' 5.4"	50' 11.5"	51' 2.9"	51' 6.6"	52' 2.4"	52' 11.1"	53' 8.5"	54' 6.7"	55' 5.6"	56' 5.2"	57' 5.5"
50'	51' 5"	51' 11.1"	52' 2.4"	52' 6"	53' 1.7"	53' 10.2"	54' 7.5"	55' 5.5"	56' 4.3"	57' 3.7"	58' 3.7"
51'	52' 4.7"	52' 10.6"	53' 1.9"	53' 5.4"	54' 1"	54' 9.4"	55' 6.5"	56' 4.4"	57' 2.9"	58' 2.2"	59' 2"
52'	53' 4.4"	53' 10.2"	54' 1.4"	54' 4.9"	55' 0.3"	55' 8.6"	56' 5.5"	57' 3.3"	58' 1.7"	59' 0.7"	60' 0.4"
53'	54' 4.1"	54' 9.8"	55' 1"	55' 4.3"	55' 11.7"	56' 7.8"	57' 4.6"	58' 2.2"	59' 0.4"	59' 11.3"	60' 10.8"
54'	55' 3.8"	55' 9.4"	56' 0.5"	56' 3.8"	56' 11.1"	57' 7"	58' 3.7"	59' 1.1"	59' 11.2"	60' 9.9"	61' 9.3"
55'	56' 3.5"	56' 9"	57' 0.1"	57' 3.4"	57' 10.4"	58' 6.3"	59' 2.8"	60' 0.1"	60' 10"	61' 8.6"	62' 7.8"
56'	57' 3.3"	57' 8.7"	57' 11.7"	58' 2.9"	58' 9.9"	59' 5.6"	60' 2"	60' 11.1"	61' 8.9"	62' 7.3"	63' 6.4"
57'	58' 3"	58' 8.3"	58' 11.3"	59' 2.4"	59' 9.3"	60' 4.9"	61' 1.2"	61' 10.2"	62' 7.8"	63' 6.1"	64' 5"
58'	59' 2.7"	59' 8"	59' 10.9"	60' 2"	60' 8.7"	61' 4.2"	62' 0.4"	62' 9.2"	63' 6.7"	64' 4.9"	65' 3.6"
59'	60' 2.5"	60' 7.7"	60' 10.5"	61' 1.6"	61' 8.2"	62' 3.6"	62' 11.6"	63' 8.3"	64' 5.7"	65' 3.7"	66' 2.3"
60'	61' 2.3"	61' 7.3"	61' 10.2"	62' 1.2"	62' 7.7"	63' 2.9"	63' 10.9"	64' 7.5"	65' 4.7"	66' 2.5"	67' 1"
61'	62' 2"	62' 7"	62' 9.8"	63' 0.8"	63' 7.2"	64' 2.3"	64' 10.2"	65' 6.6"	66' 3.7"	67' 1.4"	67' 11.7"
62'	63' 1.8"	63' 6.7"	63' 9.5"	64' 0.4"	64' 6.7"	65' 1.8"	65' 9.5"	66' 5.8"	67' 2.8"	68' 0.4"	68' 10.5"
63'	64' 1.6"	64' 6.4"	64' 9.1"	65' 0"	65' 6.3"	66' 1.2"	66' 8.8"	67' 5"	68' 1.9"	68' 11.3"	69' 9.3"
64'	65' 1.4"	65' 6.2"	65' 8.8"	65' 11.6"	66' 5.8"	67' 0.6"	67' 8.1"	68' 4.2"	69' 1"	69' 10.3"	70' 8.2"
65'	66' 1.2"	66' 5.9"	66' 8.5"	66' 11.3"	67' 5.4"	68' 0.1"	68' 7.5"	69' 3.5"	70' 0.1"	70' 9.3"	71' 7.1"
66'	67' 1"	67' 5.6"	67' 8.2"	67' 10.9"	68' 4.9"	68' 11.6"	69' 6.8"	70' 2.7"	70' 11.2"	71' 8.3"	72' 6"
67'	68' 0.8"	68' 5.4"	68' 7.9"	68' 10.6"	69' 4.5"	69' 11.1"	70' 6.2"	71' 2"	71' 10.4"	72' 7.4"	73' 4.9"
68'	69' 0.6"	69' 5.1"	69' 7.6"	69' 10.3"	70' 4.1"	70' 10.6"	71' 5.6"	72' 1.3"	72' 9.6"	73' 6.5"	74' 3.9"

11. ROOF PANELS ASSEMBLY

CAUTION: Steel roof panels may have sharp edges. Wear work gloves and handle with care.

11.1 Mark the first panel (using a pencil) at a distance of 6" from each end on both sides as shown. This will allow for the 6" over hang.

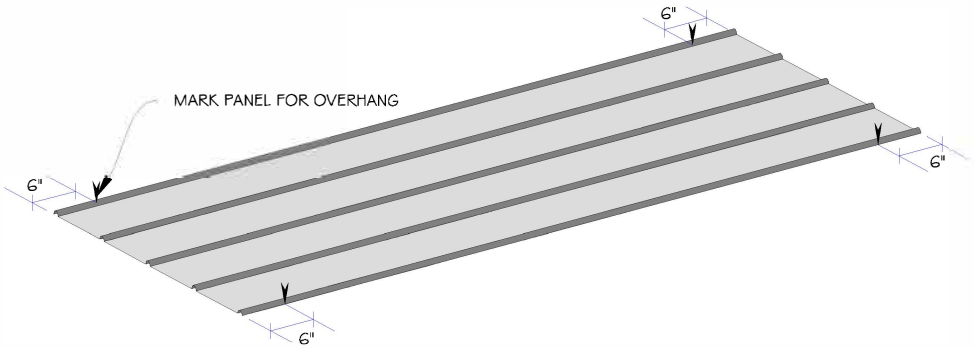

STEP 11.1

11.2 Place a mark on the arches at 10" from the apex on any side. The first panel will be aligned with this mark.

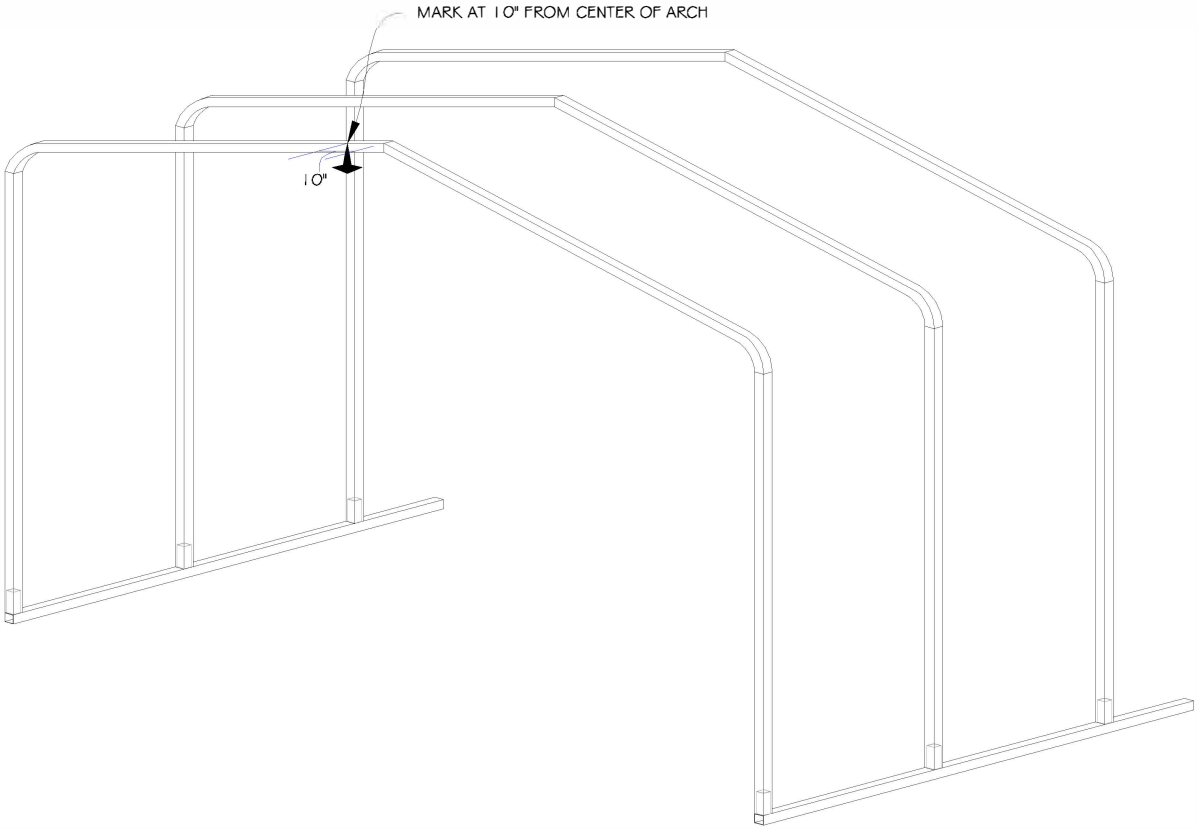

STEP 11.2

11.3 Using two ladders, one at each end, raise the panel to the top of the columns. Slide it up towards the apex and align the 6" mark of the first panel with this mark as shown below.

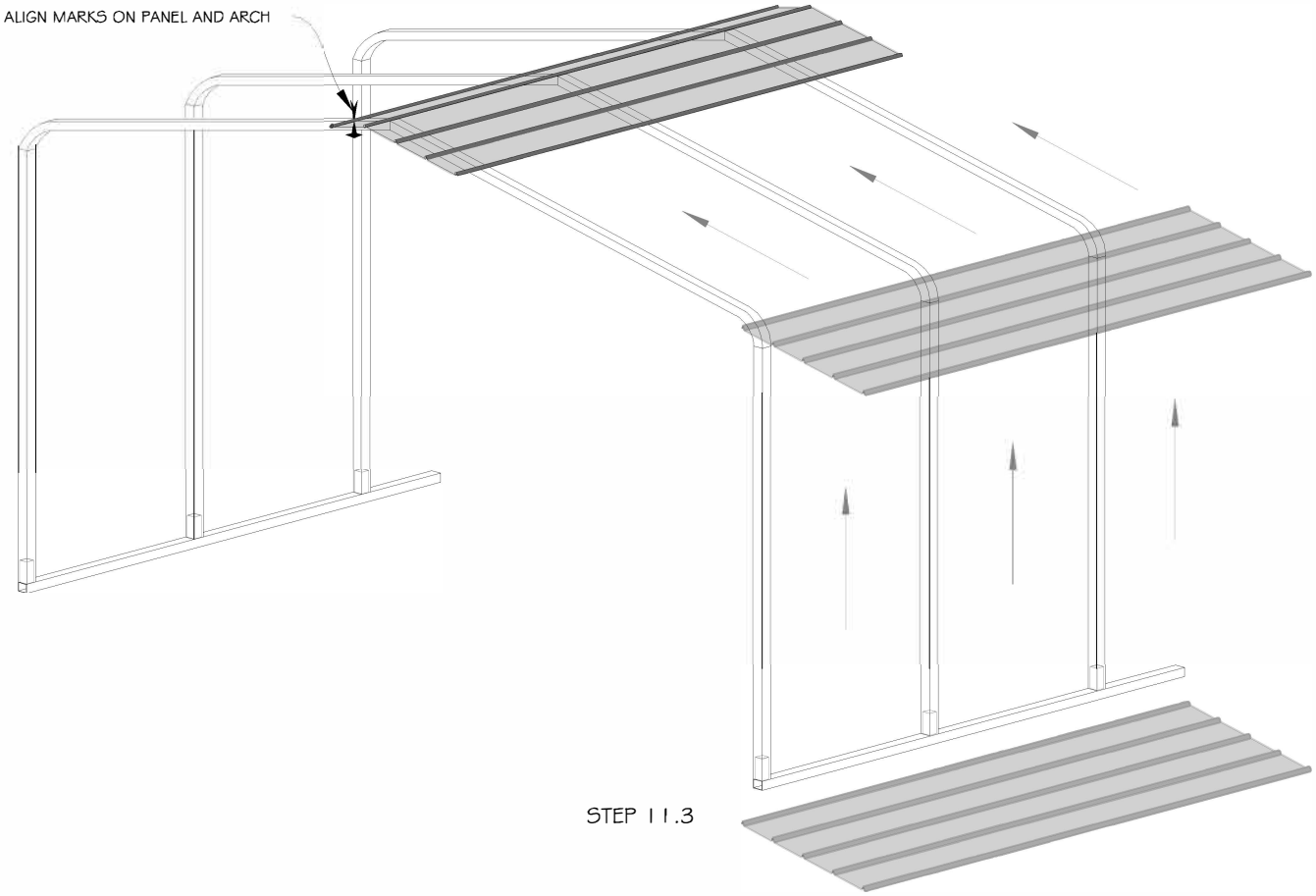

STEP 11.3

11.4 Properly aligning the first panel is important as it will square up the sturcture. Secure the panel to the arches using the self tapping screws (E). Place one screw between second, third and fourth major ribs on each arch. At this time do not place the screws between the edge ribs. DO NOT over drive screws. Washers should be snug but not flattened. It is a good idea to pre-drill holes as it will make it easier to attach the panels.

NOTE: If more than one panel is needed to cover the length, add caulking to the top of the lapped panel.

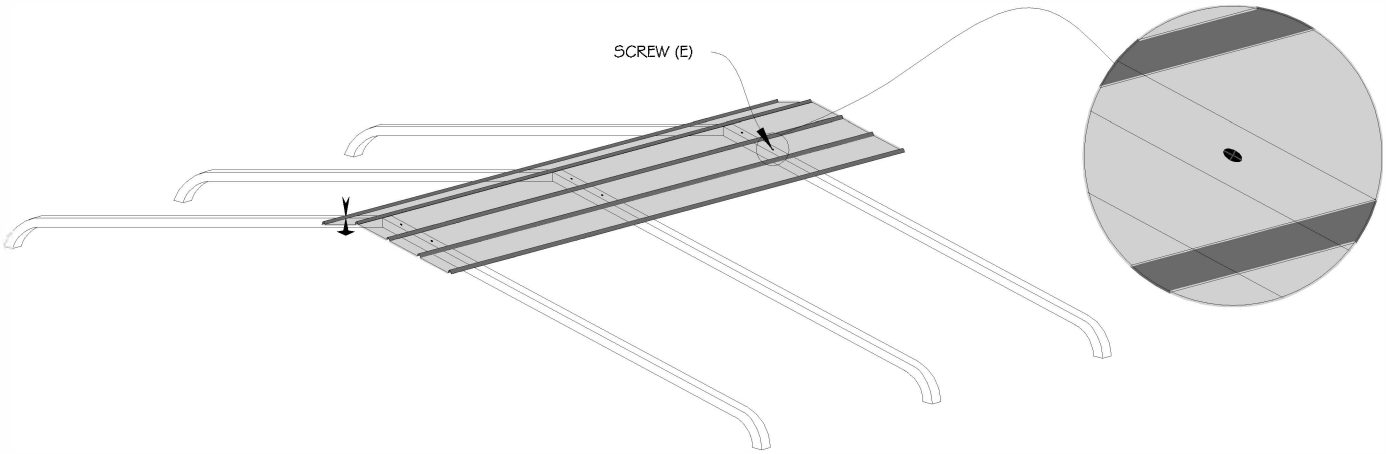

STEP 11.4

11.5 Slide second panel under 1st as shown below. Make sure the lipped edge of the first panel is over the lipped edge of the second panel.

NOTE: Open side of lap must always be on the down slop to prevent water penetration. Add caulking to the top of the lapped rib for better water protection.

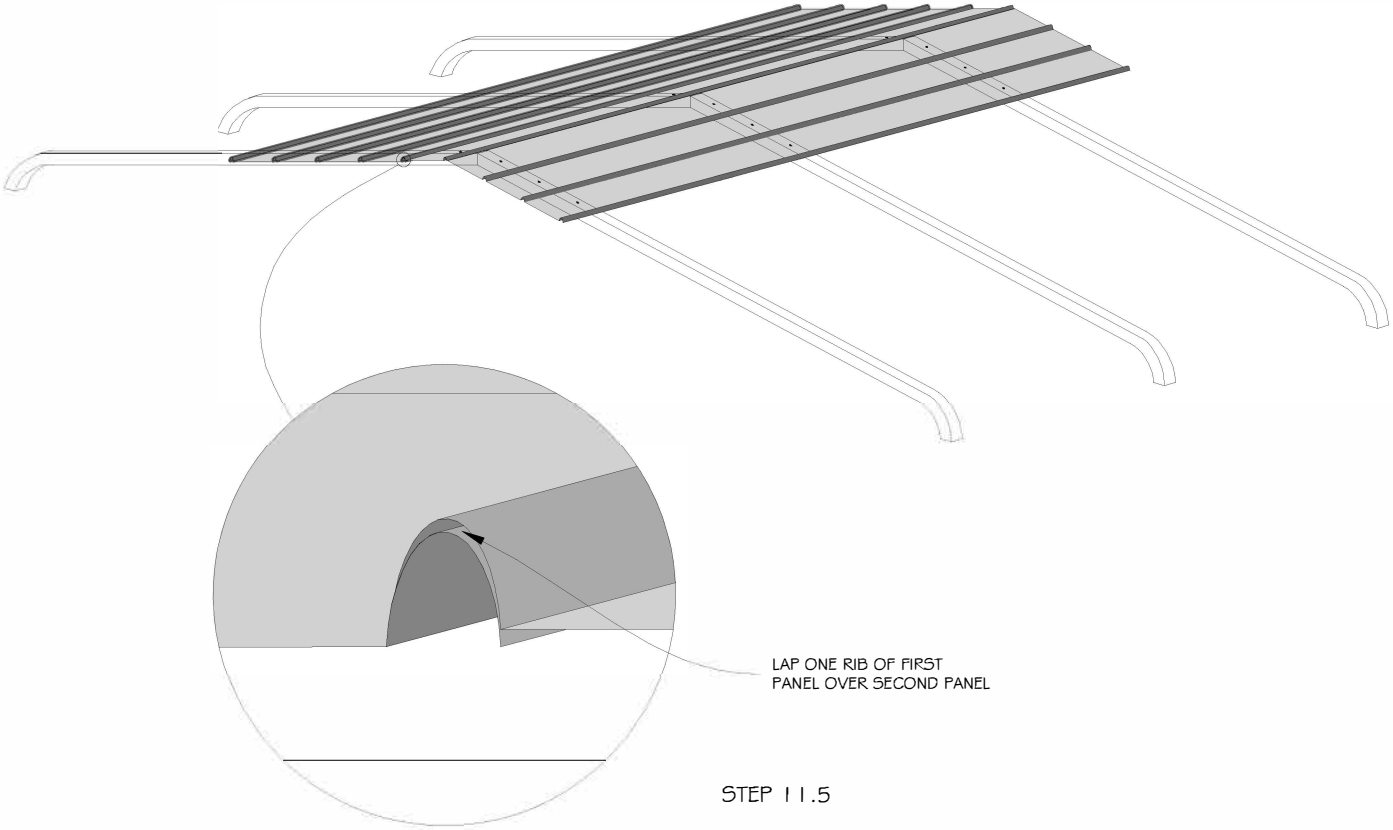

STEP 11.5

11.6 Secure the remaining screws in the first panel on the side of the second panel. For the second panel, attach all screws except those between the last and second to last ribs. These have to be secured after the next panel has been added to alow lifting of edge.

11.7 Continue adding panels in this way till the full area is covered. Adjust width of panels by lapping more than 1 rib if necessary.

12. TRIM ATTACHMENT

12.1 Take the two pieces of trim (F). On each mark 10" from one end and then make two marks at 9" from the same end as shown below.

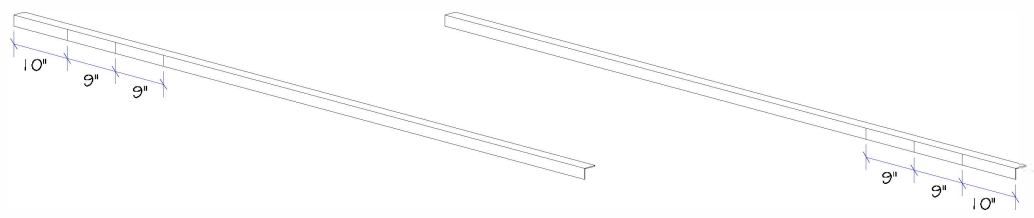

STEP 12.1

12.2 Using the tin snips, make 3 cuts only to the crease of the trim (F). DO NOT CUT ALL THE WAY THROUGH.

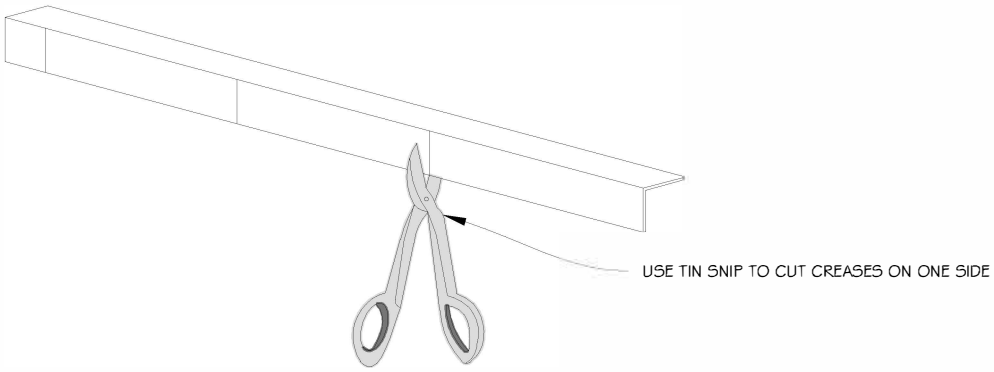

12.3 With hands, simply bend the trim at the cuts and attach to the structure with self tapping screws at every major rib from on top of the trim. Additional screws maybe used to attach trim pieces together.

12.4 With the tin snips, cut a third piece of trim (F) in half. Cut at the center of each piece to the crease as in the previous step. Bend with hands to create a V. Attach to the structure with screws at every 9" on top of trim.

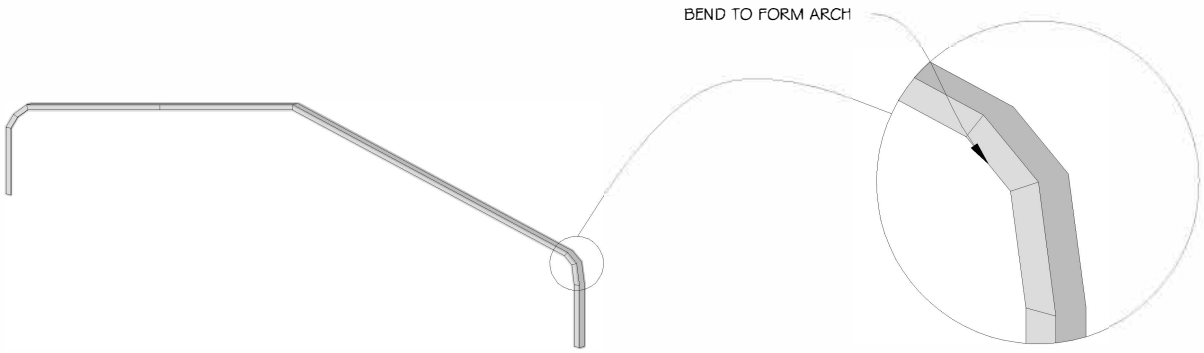

STEP 12.3